WN 020926 10/12

DC-Modul

Software Release R1.20

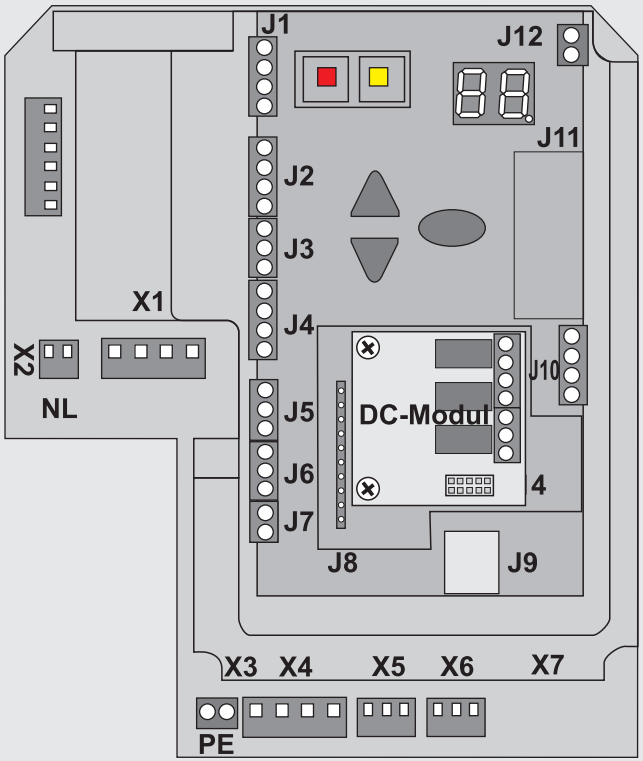

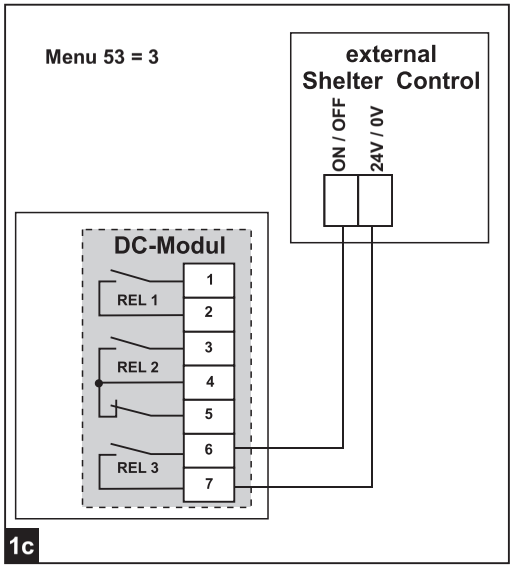

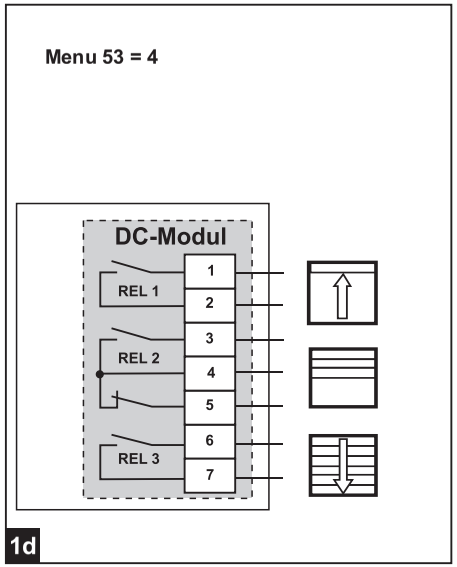

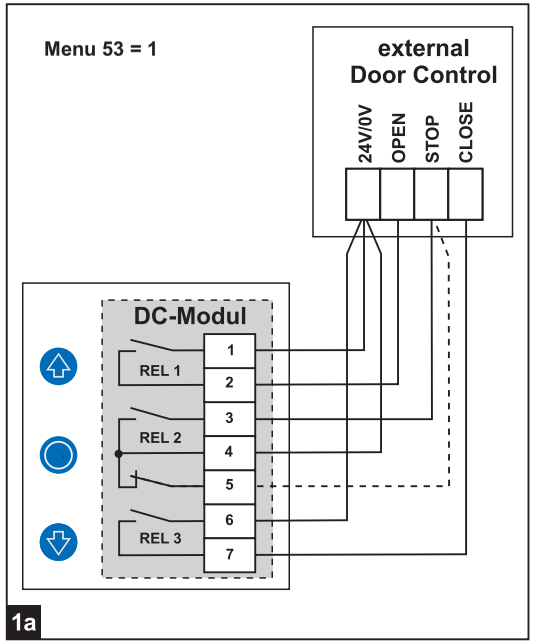

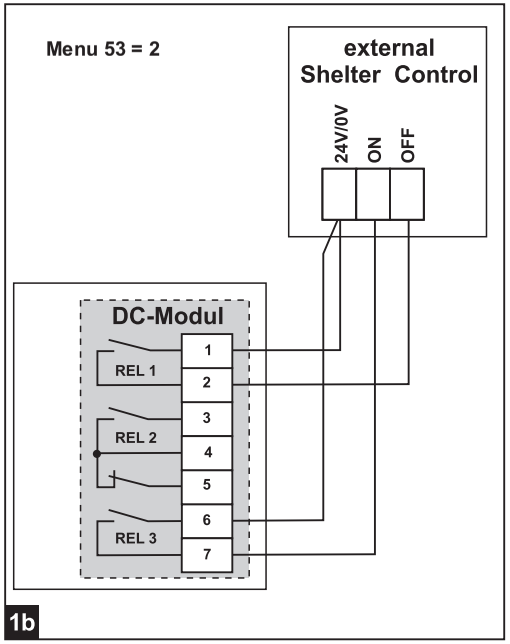

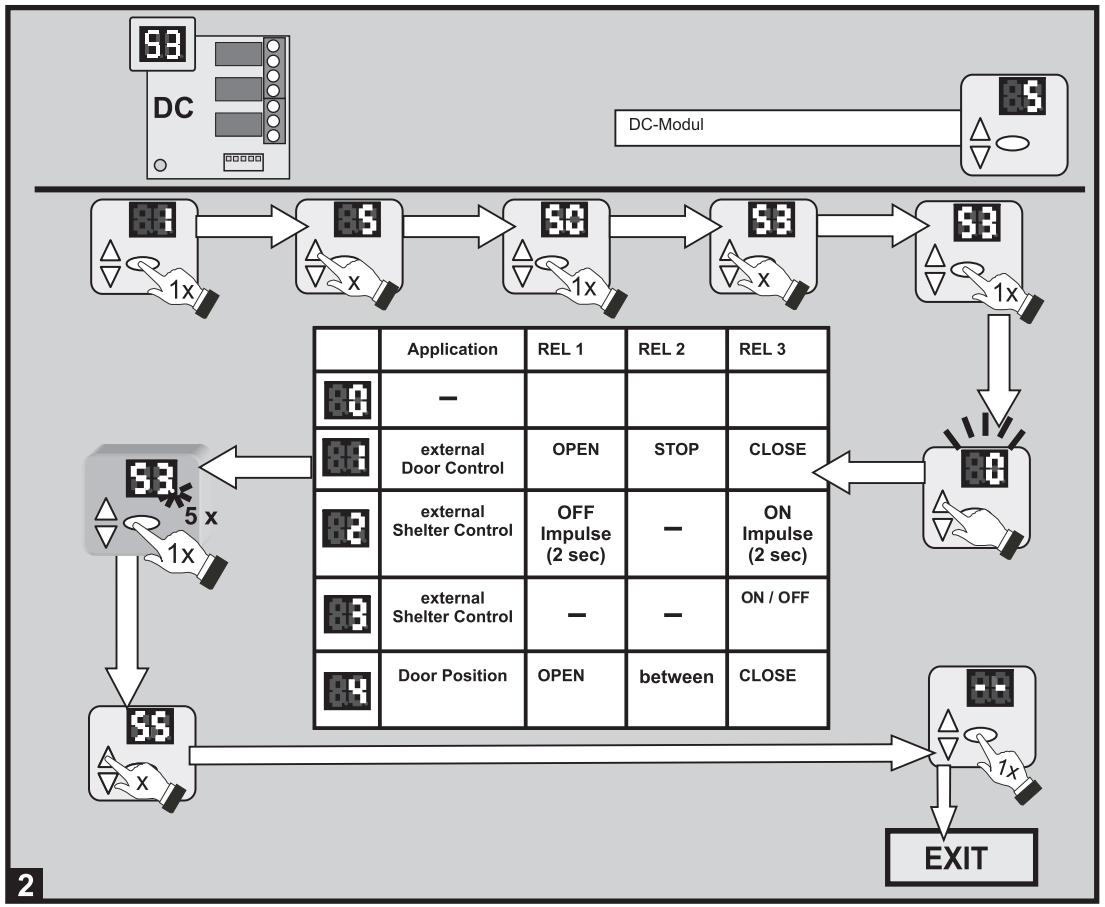

	Application	REL 1	REL 2	REL 3
0	–			
1	external Door Control	OPEN	STOP	CLOSE
2	external Shelter Control	OFF Impulse (2 sec)	–	ON Impulse (2 sec)
3	external Shelter Control	–	–	ON / OFF
4	Door Position	OPEN	between	CLOSE